NIT-IND-1170_p

35,4W CRI80 3000K 120º Cpper PUSH ONLY

Product reference: C4A0.830031C0.DF.XX4

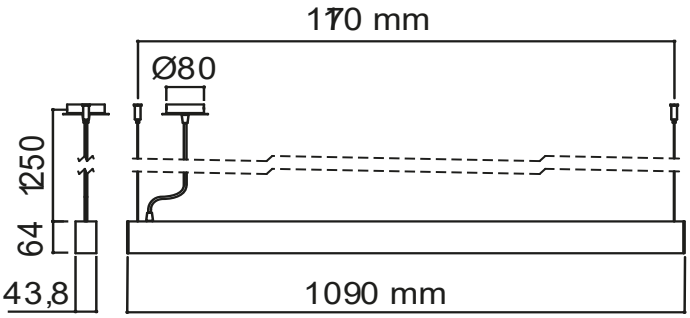

Total Power	Luminous flux	Total Efficience	CRI	CCT
Potencia total	Flujo luminoso	Eficiencia total	IRC	CCT
35,4 W	3315 Lm	94 Lm/W	80	3000 K

MacAdam	Beam angle	Voltage	Dimming	UGR
MacAdam	Ángulo de apertura	Voltaje	Regulación	UGR
3	120º	220-240 Vac	PUSH ONLY	<25

Material	Finish	IP	Lifespan	Warranty
Material	Acabado	IP	Vida útil	Garantía
Aluminium	Copper Brushed Satin	20	L70 > 50000h	5 years *

LED/Optic Óptica
- PCB TRIDONIC
- Opal diffuser

Driver Convertidor
- Included - Incluido

Downloads Descargas

IP20

See glossary of symbols - Ver glosario de símbolos

* See company terms and conditions - Ver condiciones de empresa

At HER Lighting we are committed to constant innovation and improvement. This means that product specifications, data, and technical details may be updated at any time to enhance reliability, functionality, or performance. We make every effort to ensure the accuracy of our product images; however, variations in lighting conditions and screen settings may cause colours to appear differently. Images are indicative of the style and quality of our luminaires but may not exactly represent the final product you receive, as we are continuously refining our designs.

NIT-IND-1170_p

35,4W CRI80 3000K 120º Cpper PUSH ONLY

Product reference: C4A0.830031C0.DF.XX4

Photometric Fotometría

Light emission Emisión de luz
Conic diagram

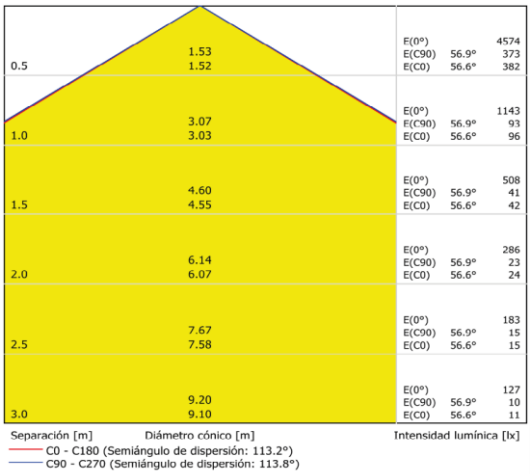

Light emission Emisión de luz
CDL polar

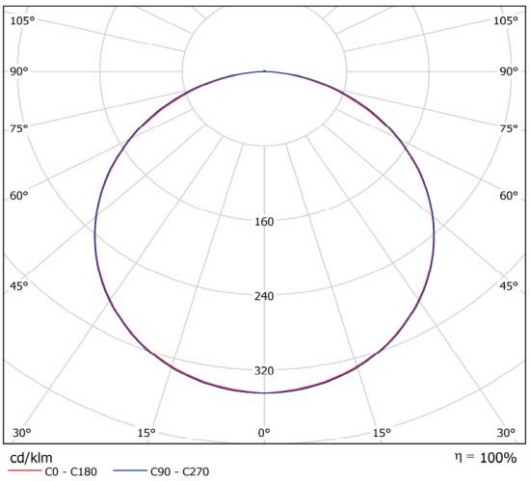

Accessories Accesorios

-

* See company terms and conditions - Ver condiciones de empresa

At HER Lighting we are committed to constant innovation and improvement. This means that product specifications, data, and technical details may be updated at any time to enhance reliability, functionality, or performance. We make every effort to ensure the accuracy of our product images; however, variations in lighting conditions and screen settings may cause colours to appear differently. Images are indicative of the style and quality of our luminaires but may not exactly represent the final product you receive, as we are continuously refining our designs.