NX7-F-IND-2010_on

44,6W CRI80 2700K 65º Ocre DALI-2

Product reference: L7A0.82703965.LX.XX5

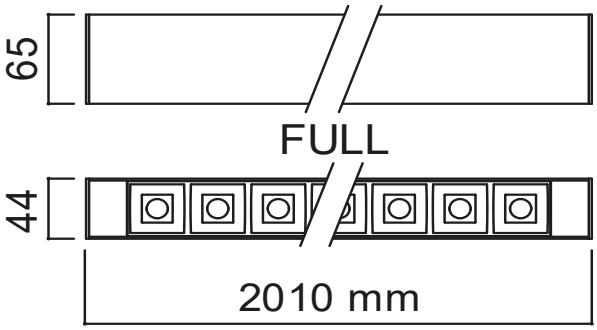

Total Power Potencia total	Luminous flux Flujo luminoso	Total Efficience Eficiencia total	CRI IRC	CCT CCT
44,6 W	5880 Lm	132 Lm/W	80	2700 K

MacAdam MacAdam	Beam angle Ángulo de apertura	Voltage Voltaje	Dimming Regulación	UGR UGR
3	65º	220-240 Vac	DALI-2	<19

Material Material	Finish Acabado	IP IP	Lifespan Vida útil	Warranty Garantía
Aluminium	Ocre Textured Matt NCS S 5040-Y70R	20	L70 > 50000h	5 years *

LED/Optic Óptica
- PCB TRIDONIC
- Lens

Driver Convertidor
- Included - Incluido

Downloads Descargas

IP20

See glossary of symbols - Ver glosario de símbolos

* See company terms and conditions - Ver condiciones de empresa

At HER Lighting we are committed to constant innovation and improvement. This means that product specifications, data, and technical details may be updated at any time to enhance reliability, functionality, or performance. We make every effort to ensure the accuracy of our product images; however, variations in lighting conditions and screen settings may cause colours to appear differently. Images are indicative of the style and quality of our luminaires but may not exactly represent the final product you receive, as we are continuously refining our designs.

NX7-F-IND-2010_on

44,6W CRI80 2700K 65º Ocre DALI-2

Product reference: L7A0.82703965.LX.XX5

Photometric Fotometría

Light emission Emisión de luz
Conic diagram

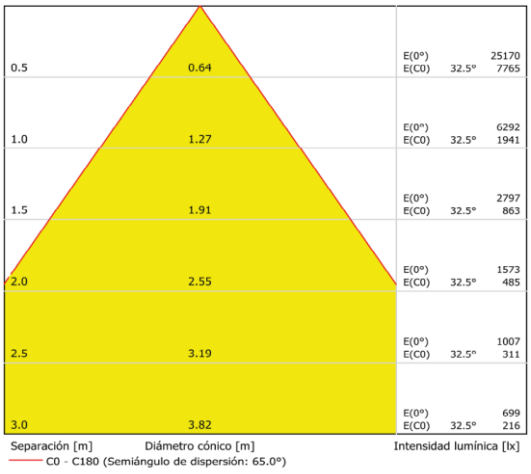

Light emission Emisión de luz
CDL polar

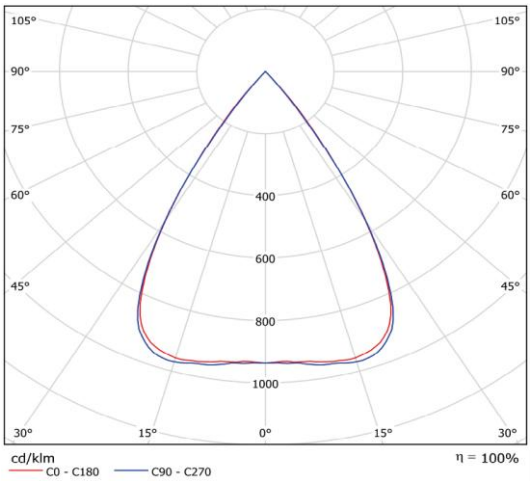

Accessories Accesorios

-

* See company terms and conditions - Ver condiciones de empresa

At HER Lighting we are committed to constant innovation and improvement. This means that product specifications, data, and technical details may be updated at any time to enhance reliability, functionality, or performance. We make every effort to ensure the accuracy of our product images; however, variations in lighting conditions and screen settings may cause colours to appear differently. Images are indicative of the style and quality of our luminaires but may not exactly represent the final product you receive, as we are continuously refining our designs.