NX7-F-IND-2290_p

69,9W CRI80 3000K 35º Gun ON-OFF

Product reference: **M8A0.83006135.DM.XX1**

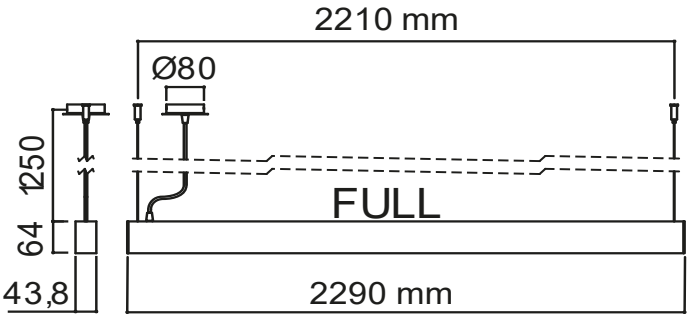

Total Power Potencia total	Luminous flux Flujo luminoso	Total Efficience Eficiencia total	CRI IRC	CCT CCT
69,9 W	9280 Lm	133 Lm/W	80	3000 K
MacAdam MacAdam	**Beam angle** Ángulo de apertura	**Voltage** Voltaje	**Dimming** Regulación	**UGR** UGR
3	35º	220-240 Vac	ON-OFF	<19
Material Material	**Finish** Acabado	**IP** IP	**Lifespan** Vida útil	**Warranty** Garantía
Aluminium	Gun Metal Smooth Matt	20	L70 > 50000h	5 years *

LED/Optic Óptica
- PCB TRIDONIC
- Lens

Driver Convertidor
- Included - Incluido

Downloads Descargas

IP20

See glossary of symbols - Ver glosario de símbolos

* See company terms and conditions - Ver condiciones de empresa

22/6/2026 ©HER Lighting

At HER Lighting we are committed to constant innovation and improvement. This means that product specifications, data, and technical details may be updated at any time to enhance reliability, functionality, or performance. We make every effort to ensure the accuracy of our product images; however, variations in lighting conditions and screen settings may cause colours to appear differently. Images are indicative of the style and quality of our luminaires but may not exactly represent the final product you receive, as we are continuously refining our designs.

NX7-F-IND-2290_p

69,9W CRI80 3000K 35º Gun ON-OFF

Product reference: M8A0.83006135.DM.XX1

Photometric Fotometría

Light emission Emisión de luz
Conic diagram

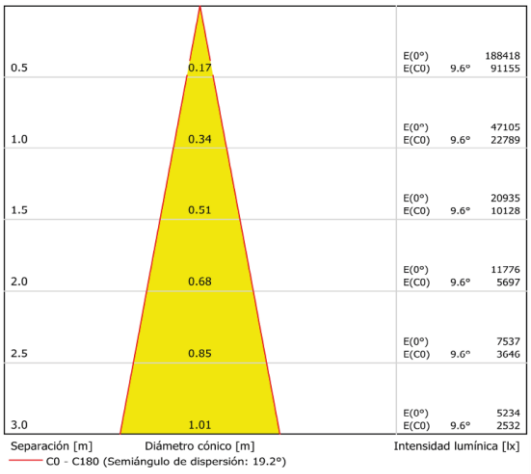

Light emission Emisión de luz
CDL polar

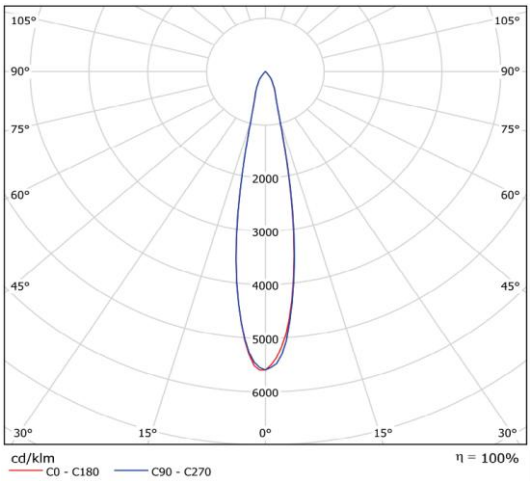

Accessories Accesorios

-

* See company terms and conditions - Ver condiciones de empresa

At HER Lighting we are committed to constant innovation and improvement. This means that product specifications, data, and technical details may be updated at any time to enhance reliability, functionality, or performance. We make every effort to ensure the accuracy of our product images; however, variations in lighting conditions and screen settings may cause colours to appear differently. Images are indicative of the style and quality of our luminaires but may not exactly represent the final product you receive, as we are continuously refining our designs.